Program (Software) Security

Objectives

- To present importance of security at system level
- To define and discuss components of the systems involved and level of security associated with each of them
- To provide overview of malicious programs
- To describe commonly known malicious programs like virus, worm, Trojans, logic bombs etc.

System

- Comprises of computing and communication environment over which developers have some control
- System components
  - Security relevant- crucial components to which malfunction or penetration can lead to security violations.
    - E.g. OS and computer hardware examples
  - Others- Objects that system controls and protects
    - Programs (not processes), data, terminal, modem
- Security perimeter- line of demarcation between security relevant and other components

User, trust and trusted systems

- User- a person whose information system protects and whose access to information is controlled by system
- User is trusted with some confidential information.
- System security needs to have trust in security related components inside the security perimeter.
- Trust in systems is built using techniques of identification and authentication.

System and trusted program

Trusted Computer Systems

- information security is increasingly important
- have varying degrees of sensitivity of information
  - cf military info classifications: confidential, secret etc
- subjects (people or programs) have varying rights of access to objects (information)
- want to consider ways of increasing confidence in systems to enforce these rights
- known as multilevel security
  - subjects have **maximum** & **current** security level
  - objects have a fixed security level **classification**

Reference Monitor

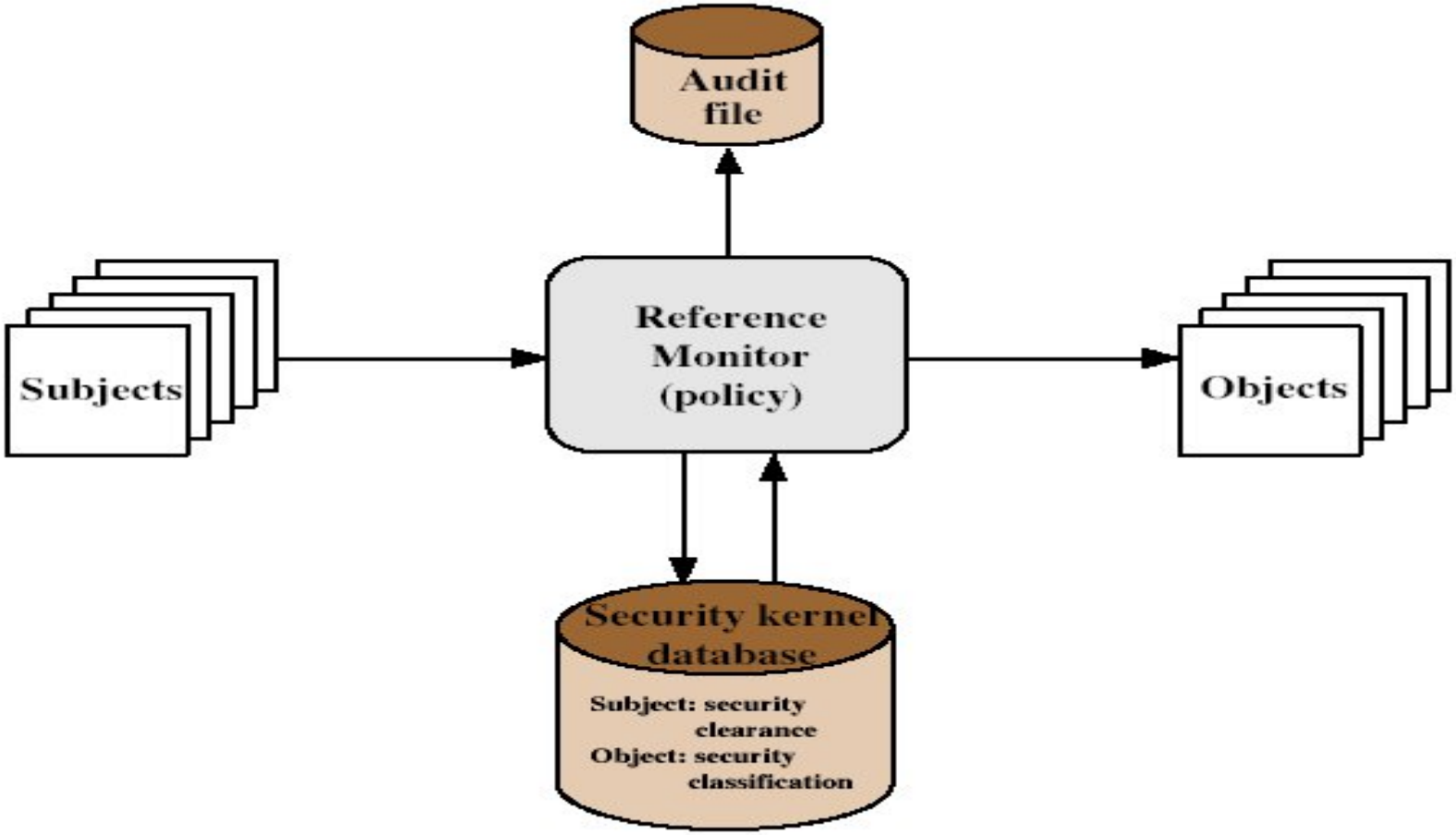

Why Software?

- Why is software as important to security as crypto, access control and protocols?
- Virtually all of information security is implemented in software
- If your software is subject to attack, your security is broken
  - Regardless of strength of crypto, access control or protocols
- Software is a poor foundation for security

Mark Stamp's Information Security: Principles and Practices by Mark Stamp/ Deven Shah.
Copyright ☭ 2009 Wiley India Pvt. Ltd. All rights reserved.

Bad Software

- Bad software is everywhere!
- NASA Mars Lander (cost $165 million)
  - Crashed into Mars
  - Error in converting English and metric units of measure
- Denver airport
  - Buggy baggage handling system
  - Delayed airport opening by 11 months
  - Cost of delay exceeded $1 million/day
- MV-22 Osprey
  - Advanced military aircraft
  - Lives have been lost due to faulty software

Mark Stamp's Information Security: Principles and Practices by Mark Stamp/ Deven Shah.
Copyright ☭ 2009 Wiley India Pvt. Ltd. All rights reserved.

Software Issues

"Normal" users

- Find bugs and flaws by accident
- Hate bad software…
- …but must learn to live with it
- Must make bad software work

Attackers

- Actively look for bugs and flaws
- Like bad software…
- …and try to make it misbehave
- Attack systems thru bad software

Mark Stamp's Information Security: Principles and Practices by Mark Stamp/ Deven Shah.
Copyright ☭ 2009 Wiley India Pvt. Ltd. All rights reserved.

Complexity

- "Complexity is the enemy of security", Paul Kocher, Cryptography Research, Inc.

system	Lines of code (LOC)
Netscape	17,000,000
Space shuttle	10,000,000
Linux	1,500,000
Windows XP	40,000,000
Boeing 777	7,000,000

- A new car contains more LOC than was required to land the Apollo astronauts on the moon

Mark Stamp's Information Security: Principles and Practices by Mark Stamp/ Deven Shah.
Copyright © 2009 Wiley India Pvt. Ltd. All rights reserved.

Lines of Code and Bugs

- Conservative estimate: 5 bugs/1000 LOC
- **Do the math**
  - Typical computer: 3,000 exe's of 100K each
  - Conservative estimate of 50 bugs/exe
  - About 150k bugs per computer
  - 30,000 node network has 4.5 billion bugs
  - Suppose that only 10% of bugs security-critical and only 10% of those remotely exploitable
  - Then "only" 4.5 million critical security flaws!

Mark Stamp's Information Security: Principles and Practices by Mark Stamp/ Deven Shah.
Copyright ☭ 2009 Wiley India Pvt. Ltd. All rights reserved.

Software Security Topics

- Program flaws (unintentional)
  - Buffer overflow
  - Incomplete mediation
  - Race conditions
- Malicious software (intentional)
  - Viruses
  - Worms
  - Other breeds of malware

Mark Stamp's Information Security: Principles and Practices by Mark Stamp/ Deven Shah.
Copyright ☭ 2009 Wiley India Pvt. Ltd. All rights reserved.

Program Flaws

- An **error** is a programming mistake
  - To err is human
- An error may lead to incorrect state: **fault**
  - A fault is internal to the program
- A fault may lead to a **failure**, where a system departs from its expected behavior
  - A failure is externally observable

error → **fault** → **failure**

Mark Stamp's Information Security: Principles and Practices by Mark Stamp/ Deven Shah.
Copyright ☭ 2009 Wiley India Pvt. Ltd. All rights reserved.

Example

```
char array[10];
for(i = 0; i < 10; ++i)
     array[i] = `A`;
array[10] = `B`;
```

- This program has an **error**
- This error might cause a **fault**
  - Incorrect internal state
- If a fault occurs, it might lead to a **failure**
  - Program behaves incorrectly (external)
- We use the term **flaw** for all of the above

Mark Stamp's Information Security: Principles and Practices by Mark Stamp/ Deven Shah.
Copyright ☭ 2009 Wiley India Pvt. Ltd. All rights reserved.

Secure Software

- In software engineering, try to insure that a program does what is intended
- Secure software engineering requires that the software **does what is intended…**
- **…and nothing more**
- Absolutely secure software is impossible
  - Absolute security is almost never possible!
- How can we manage the risks?

Mark Stamp's Information Security: Principles and Practices by Mark Stamp/ Deven Shah.
Copyright © 2009 Wiley India Pvt. Ltd. All rights reserved.

Program Flaws

- Program flaws are unintentional
  - But still create security risks
- We'll consider 3 types of flaws
  - Buffer overflow (smashing the stack)
  - Incomplete mediation
  - Race conditions
- Many other flaws can occur
- These are most common

Mark Stamp's Information Security: Principles and Practices by Mark Stamp/ Deven Shah.
Copyright ☭ 2009 Wiley India Pvt. Ltd. All rights reserved.

Buffer Overflow

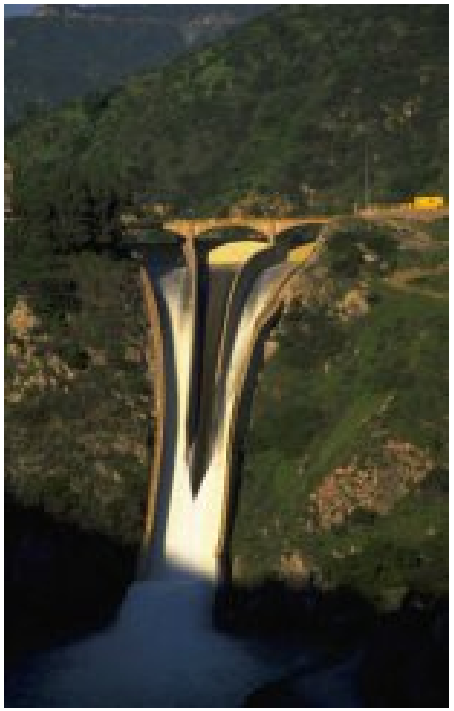

Mark Stamp's Information Security: Principles and Practices by Mark Stamp/ Deven Shah.
Copyright ☭ 2009 Wiley India Pvt. Ltd. All rights reserved.

Typical Attack Scenario

- Users enter data into a Web form
- Web form is sent to server
- Server writes data to buffer, without checking length of input data
- Data overflows from buffer
- Sometimes, overflow can enable an attack
- Web form attack could be carried out by anyone with an Internet connection

Mark Stamp's Information Security: Principles and Practices by Mark Stamp/ Deven Shah.
Copyright ☙ 2009 Wiley India Pvt. Ltd. All rights reserved.

Buffer Overflow

```
int main(){
    int buffer[10];
    buffer[20] = 37;}
```

- **Q:** What happens when this is executed?
- **A:** Depending on what resides in memory at location "buffer[20]"
  - Might overwrite **user** data or code
  - Might overwrite **system** data or code

Mark Stamp's Information Security: Principles and Practices by Mark Stamp/ Deven Shah.
Copyright © 2009 Wiley India Pvt. Ltd. All rights reserved.

Simple Buffer Overflow

- Consider boolean flag for authentication
- Buffer overflow could overwrite flag allowing anyone to authenticate!

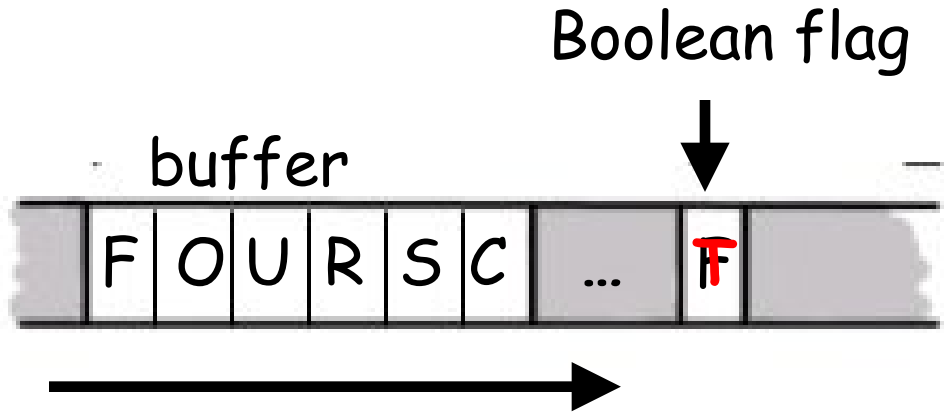

- In some cases, attacker need not be so lucky as to have overflow overwrite flag

Mark Stamp's Information Security: Principles and Practices by Mark Stamp/ Deven Shah.
Copyright © 2009 Wiley India Pvt. Ltd. All rights reserved.

Memory Organization

- **Text** == code
- **Data** == static variables
- **Heap** == dynamic data
- **Stack** == "scratch paper"
  - Dynamic local variables
  - Parameters to functions
  - Return address

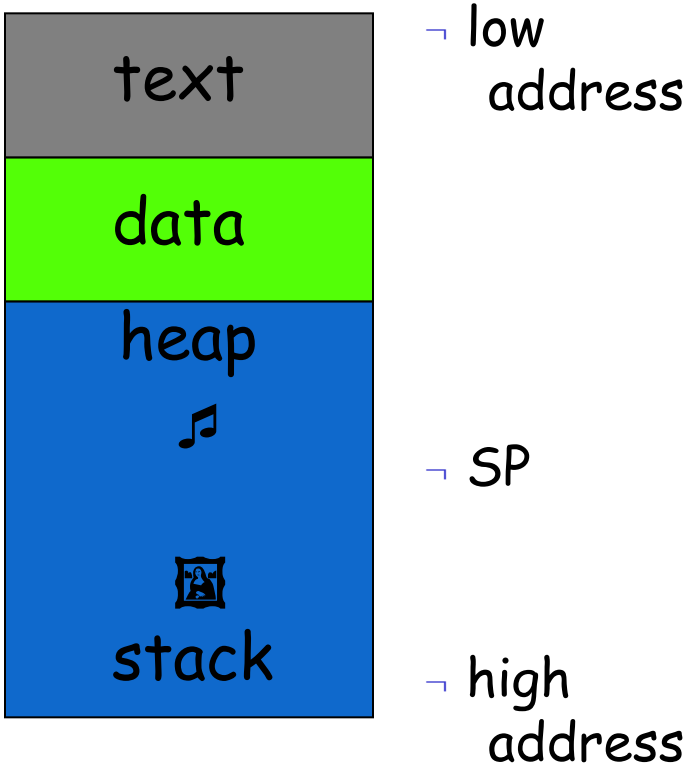

Mark Stamp's Information Security: Principles and Practices by Mark Stamp/ Deven Shah.
Copyright © 2009 Wiley India Pvt. Ltd. All rights reserved.

Simplified Stack Example

```
void func(int a, int
  b){
  char buffer[10];
}
void main(){
  func(1, 2);
}
```

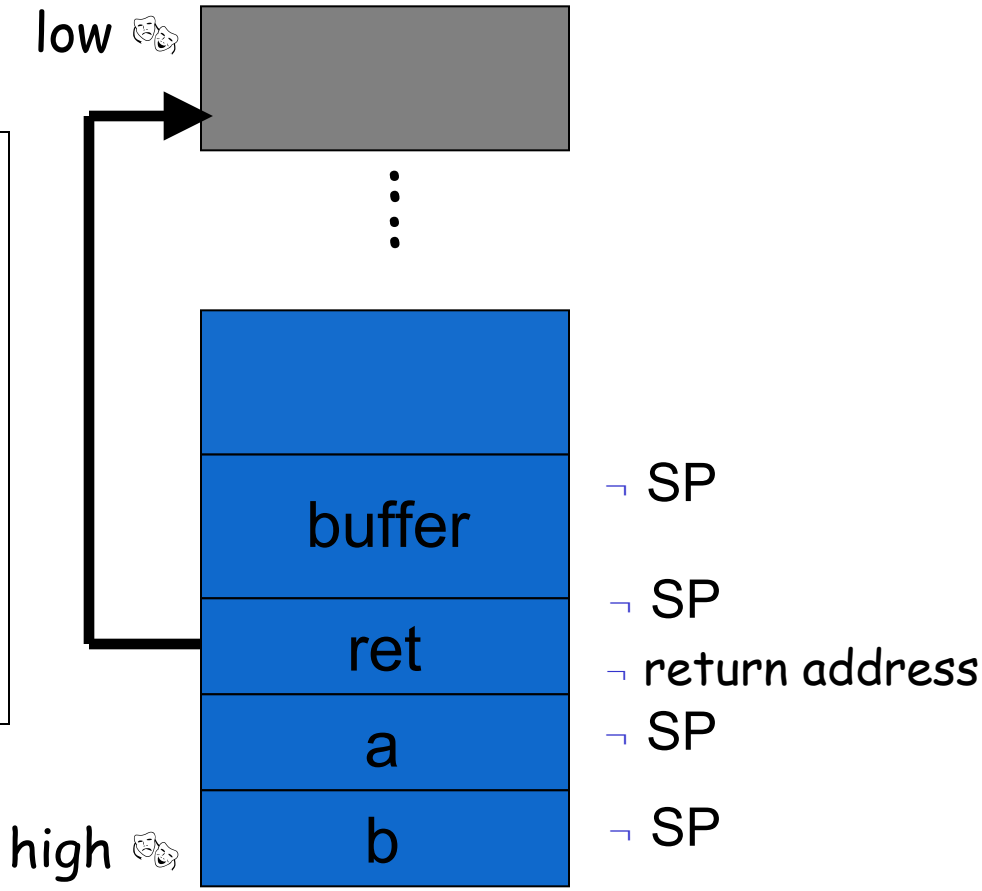

Mark Stamp's Information Security: Principles and Practices by Mark Stamp/ Deven Shah.
Copyright 2009 Wiley India Pvt. Ltd. All rights reserved.

Smashing the Stack

- What happens if buffer overflows?
- Program "returns" to wrong location
- A crash is likely

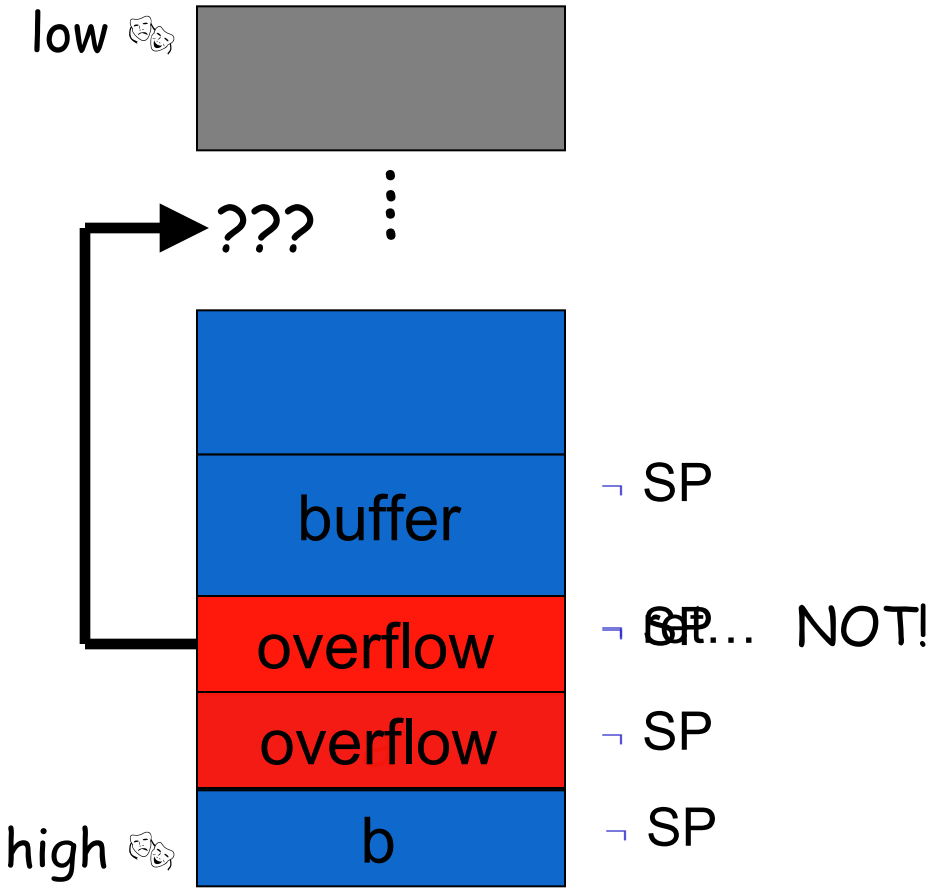

Mark Stamp's Information Security: Principles and Practices by Mark Stamp/ Deven Shah.
Copyright © 2009 Wiley India Pvt. Ltd. All rights reserved.

Smashing the Stack

- Trudy has a better idea…
- **Code injection**
- Trudy can run code of her choosing!

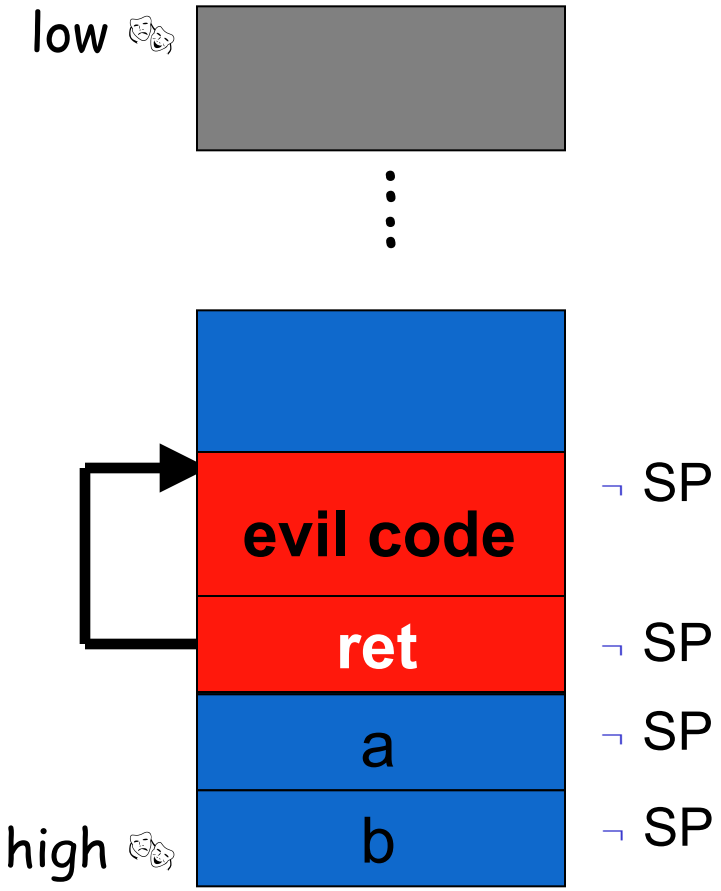

Mark Stamp's Information Security: Principles and Practices by Mark Stamp/ Deven Shah.
Copyright 2009 Wiley India Pvt. Ltd. All rights reserved.

Smashing the Stack

- Trudy may not know
  - Address of evil code
  - Location of **ret** on stack
- Solutions
  - Precede evil code with NOP "landing pad"
  - Insert lots of new **ret**

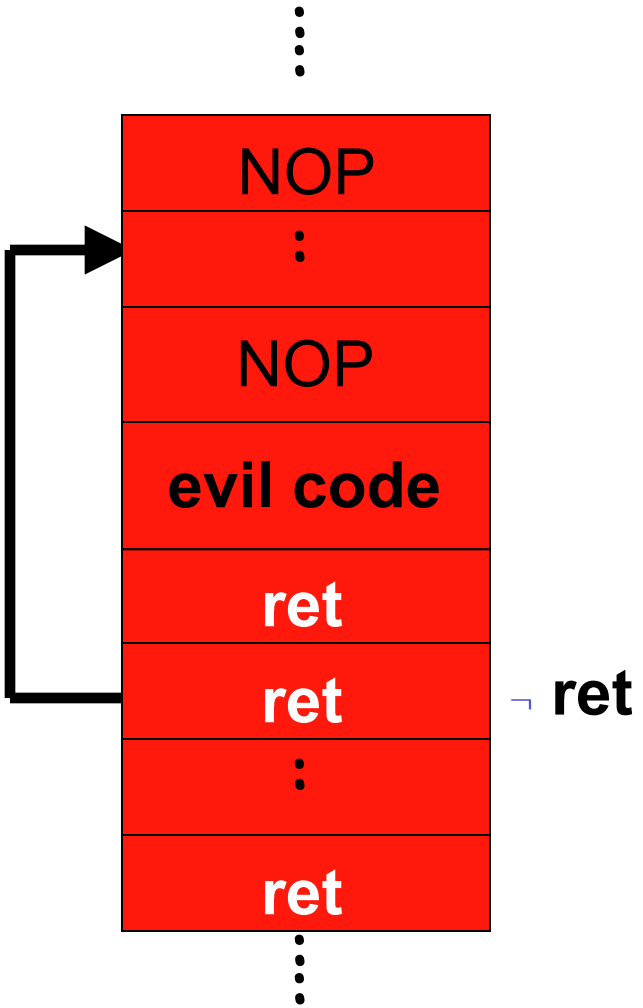

Mark Stamp's Information Security: Principles and Practices by Mark Stamp/ Deven Shah.
Copyright © 2009 Wiley India Pvt. Ltd. All rights reserved.

Stack Smashing Summary

- A buffer overflow must exist in the code
- Not all buffer overflows are exploitable
  - Things must line up just right
- If exploitable, attacker can **inject code**
- Trial and error likely required
  - Lots of help available online
  - Smashing the Stack for Fun and Profit, Aleph One
- Also heap overflow, integer overflow, etc.
- Stack smashing is "attack of the decade"

Mark Stamp's Information Security: Principles and Practices by Mark Stamp/ Deven Shah.
Copyright © 2009 Wiley India Pvt. Ltd. All rights reserved.

Stack Smashing Example

- Program asks for a serial number that the attacker does not know
- Attacker does **not** have source code
- Attacker does have the executable (exe)

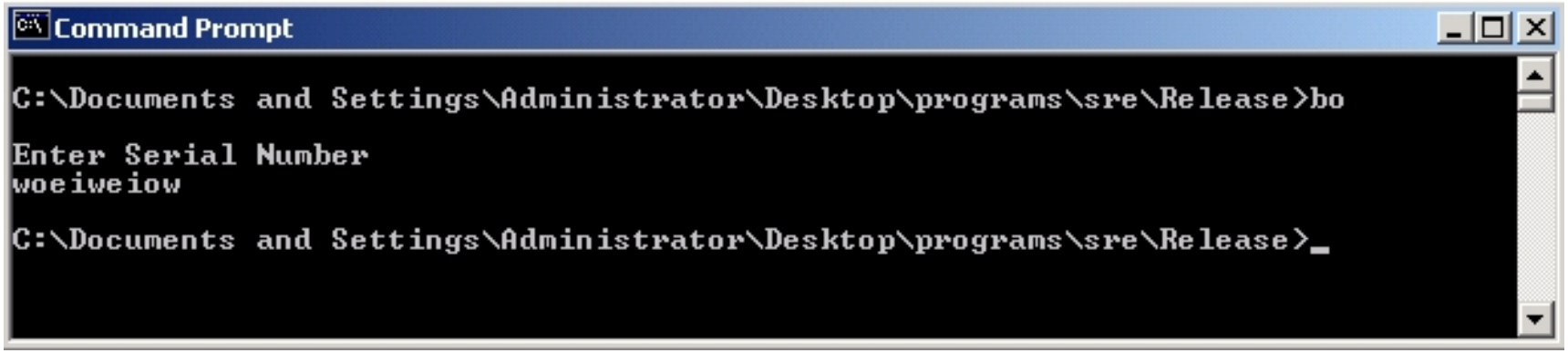

- Program quits on incorrect serial number

Mark Stamp's Information Security: Principles and Practices by Mark Stamp/ Deven Shah.
Copyright © 2009 Wiley India Pvt. Ltd. All rights reserved.

Example

- By trial and error, attacker discovers an apparent buffer overflow

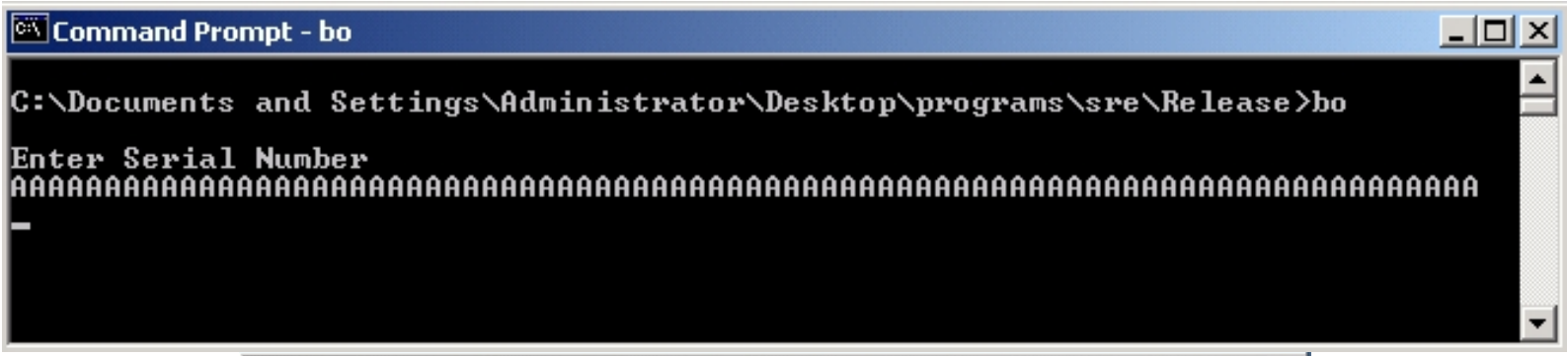

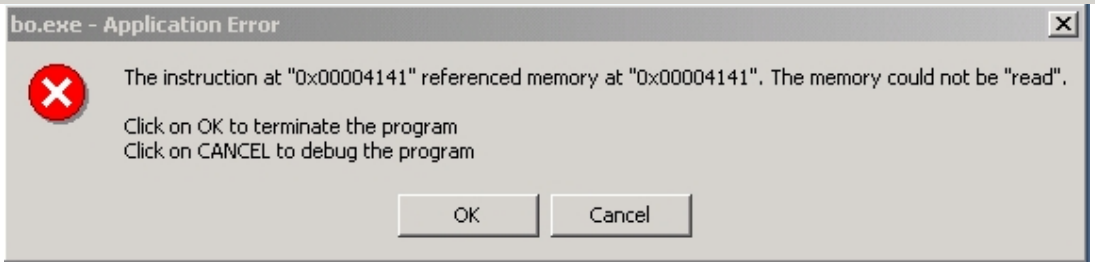

- Note that 0x41 is "A"
- Looks like **ret** overwritten by 2 bytes!

Mark Stamp's Information Security: Principles and Practices by Mark Stamp/ Deven Shah.
Copyright © 2009 Wiley India Pvt. Ltd. All rights reserved.

Example

- Next, disassemble bo.exe to find

```
.text:00401000
.text:00401000          sub     esp, 1Ch
.text:00401003          push    offset aEnterSerialNum ; "\nEnter Serial Number\n"
.text:00401008          call    sub_40109F
.text:0040100D          lea     eax, [esp+20h+var_1C]
.text:00401011          push    eax
.text:00401012          push    offset aS       ; "%s"
.text:00401017          call    sub_401088
.text:0040101C          push    8
.text:0040101E          lea     ecx, [esp+2Ch+var_1C]
.text:00401022          push    offset aS123n456 ; "S123N456"
.text:00401027          push    ecx
.text:00401028          call    sub_401050
.text:0040102D          add     esp, 18h
.text:00401030          test    eax, eax
.text:00401032          jnz     short loc_401041
.text:00401034          push    offset aSerialNumberIs ; "Serial number is correct.\n"
.text:00401039          call    sub_40109F
.text:0040103E          add     esp, 4
```

- The goal is to exploit buffer overflow to jump to address 0x401034

Mark Stamp's Information Security: Principles and Practices by Mark Stamp/ Deven Shah.
Copyright © 2009 Wiley India Pvt. Ltd. All rights reserved.

Example

- Find that 0x401034 is "@^P4" in ASCII

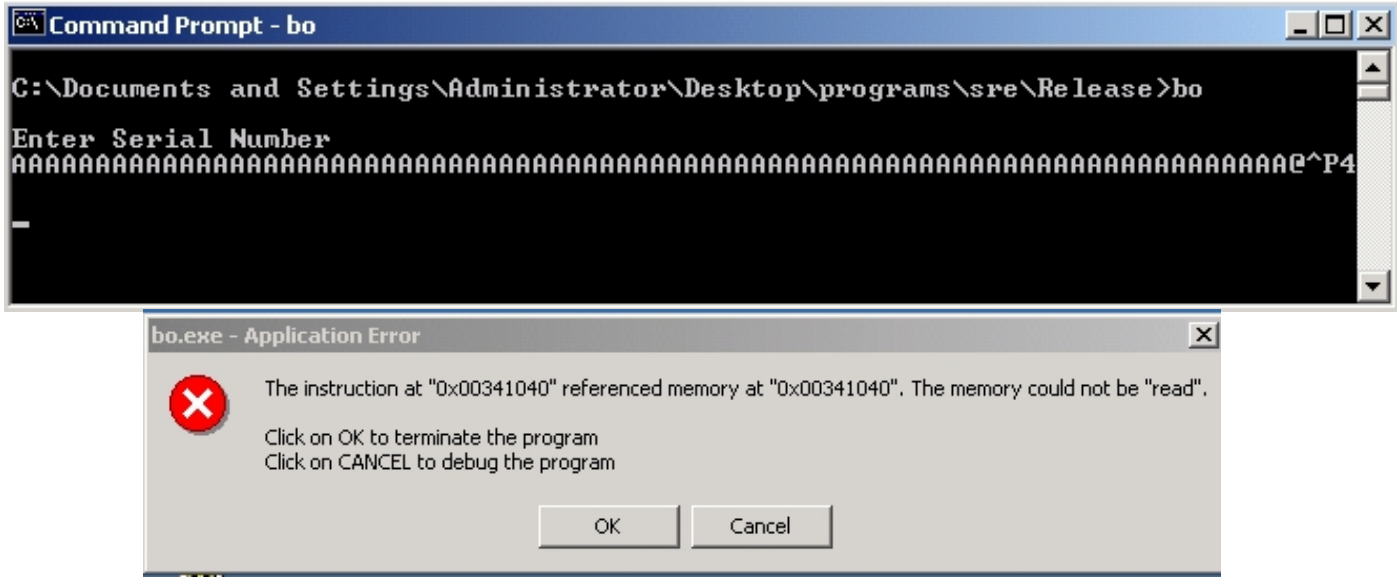
Command Prompt - bo
C:\Documents and Settings\Administrator\Desktop\programs\sre\Release>bo
Enter Serial Number
AAAA

Example

- Reverse the byte order to "4^P@" and…

```
Command Prompt

C:\Documents and Settings\Administrator\Desktop\programs\sre\Release>bo

Enter Serial Number
AAAAAAAAAAAAAAAAAAAAAAAAAAAAAAAAAAAAAAAAAAAAAAAAAAAAAAAAAAAAAAAAAAAAAAAAAAAA4^P@

Serial number is correct.

C:\Documents and Settings\Administrator\Desktop\programs\sre\Release>_
```

- Success! We've bypassed serial number check by exploiting a buffer overflow
- Overwrote the return address on the stack

Mark Stamp's Information Security: Principles and Practices by Mark Stamp/ Deven Shah.
Copyright © 2009 Wiley India Pvt. Ltd. All rights reserved.

Example

- Attacker did not require access to the source code
- Only tool used was a disassembler to determine address to jump to
- Can find address by trial and error
  - Necessary if attacker does not have exe
  - For example, a remote attack

Mark Stamp's Information Security: Principles and Practices by Mark Stamp/ Deven Shah.
Copyright ©2009 Wiley India Pvt. Ltd. All rights reserved.

Example

- Source code of the buffer overflow
- Flaw easily found by attacker
- **Even without the source code!**

```
#include <stdio.h>
#include <string.h>

main()
{
    char in[75];

    printf("\nEnter Serial Number\n");

    scanf("%s", in);

    if(!strncmp(in, "S123N456", 8))
    {
       printf("Serial number is correct.\n");
    }
}
```


Mark Stamp's Information Security: Principles and Practices by Mark Stamp/ Deven Shah.
Copyright © 2009 Wiley India Pvt. Ltd. All rights reserved.

Stack Smashing Prevention

- 1st choice: employ **non-executable stack**
  - "No execute" **NX bit** (if available)
  - Seems like the logical thing to do, but some real code executes on the stack (Java does this)
- 2nd choice: use **safe languages** (Java, C#)
- 3rd choice: use **safer C functions**
  - For unsafe functions, there are safer versions
  - For example, strncpy instead of strcpy

Mark Stamp's Information Security: Principles and Practices by Mark Stamp/ Deven Shah.
Copyright ☭ 2009 Wiley India Pvt. Ltd. All rights reserved.

Stack Smashing Prevention

- **Canary**
  - Run-time stack check
  - Push canary onto stack
  - Canary value:
    - Constant 0x000aff0d
    - Or value depends on **ret**

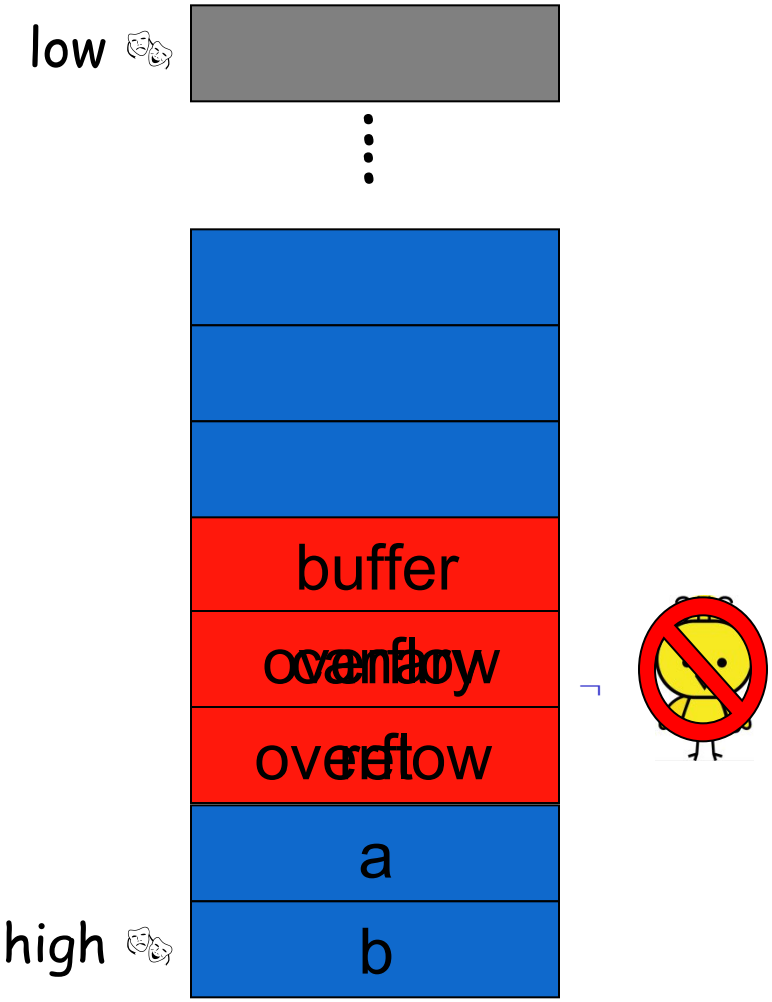

Mark Stamp's Information Security: Principles and Practices by Mark Stamp/ Deven Shah.
Copyright © 2009 Wiley India Pvt. Ltd. All rights reserved.

Microsoft's Canary

- Microsoft added **buffer security check** feature to C++ with /GS compiler flag
- Uses canary (or "security cookie")
- **Q:** What to do when canary dies?
- **A:** Check for user-supplied handler
- Handler may be subject to attack
  - Claimed that attacker can specify handler code
  - If so, "safe" buffer overflows become exploitable when /GS is used!

Mark Stamp's Information Security: Principles and Practices by Mark Stamp/ Deven Shah.
Copyright © 2009 Wiley India Pvt. Ltd. All rights reserved.

Buffer Overflow

- The "attack of the decade" for 90's
- Will be the attack of the decade for 00's
- Can be prevented
  - Use safe languages/safe functions
  - Educate developers, use tools, etc.
- Buffer overflows will exist for a long time
  - Legacy code
  - Bad software development

Mark Stamp's Information Security: Principles and Practices by Mark Stamp/ Deven Shah.
Copyright ☭ 2009 Wiley India Pvt. Ltd. All rights reserved.

Incomplete Mediation

Mark Stamp's Information Security: Principles and Practices by Mark Stamp/ Deven Shah.
Copyright ☭ 2009 Wiley India Pvt. Ltd. All rights reserved.

Input Validation

- Consider: `strcpy(buffer, argv[1])`
- A buffer overflow occurs if `len(buffer) < len(argv[1])`
- Software must **validate** the input by checking the length of `argv[1]`
- Failure to do so is an example of a more general problem: **incomplete mediation**

Mark Stamp's Information Security: Principles and Practices by Mark Stamp/ Deven Shah.
Copyright ☭ 2009 Wiley India Pvt. Ltd. All rights reserved.

Input Validation

- Consider web form data
- Suppose input is validated on client
- For example, the following is valid

```
http://www.things.com/orders/final&custID=112&
  num=55A&qty=20&price=10&shipping=5&total=205
```

- Suppose input is not checked on server
  - Why bother since input checked on client?
  - Then attacker could send http message

```
http://www.things.com/orders/final&custID=112&
  num=55A&qty=20&price=10&shipping=5&total=25
```


Mark Stamp's Information Security: Principles and Practices by Mark Stamp/ Deven Shah.
Copyright © 2009 Wiley India Pvt. Ltd. All rights reserved.

Incomplete Mediation

- Linux kernel
  - Research has revealed many buffer overflows
  - Many of these are due to incomplete mediation
- Linux kernel is "good" software since
  - Open-source
  - Kernel ❑ written by coding gurus
- Tools exist to help find such problems
  - But incomplete mediation errors can be subtle
  - And tools useful to attackers too!

Mark Stamp's Information Security: Principles and Practices by Mark Stamp/ Deven Shah.
Copyright ⛲ 2009 Wiley India Pvt. Ltd. All rights reserved.

Race Conditions

Mark Stamp's Information Security: Principles and Practices by Mark Stamp/ Deven Shah.
Copyright ☭ 2009 Wiley India Pvt. Ltd. All rights reserved.

Race Condition

- Security processes should be **atomic**
  - Occur "all at once"
- Race conditions can arise when security-critical process occurs in stages
- Attacker makes change between stages
  - Often, between stage that gives authorization, but before stage that transfers ownership
- Example: Unix mkdir

Mark Stamp's Information Security: Principles and Practices by Mark Stamp/ Deven Shah.
Copyright ☭ 2009 Wiley India Pvt. Ltd. All rights reserved.

mkdir Race Condition

- mkdir creates new directory
- How mkdir is supposed to work

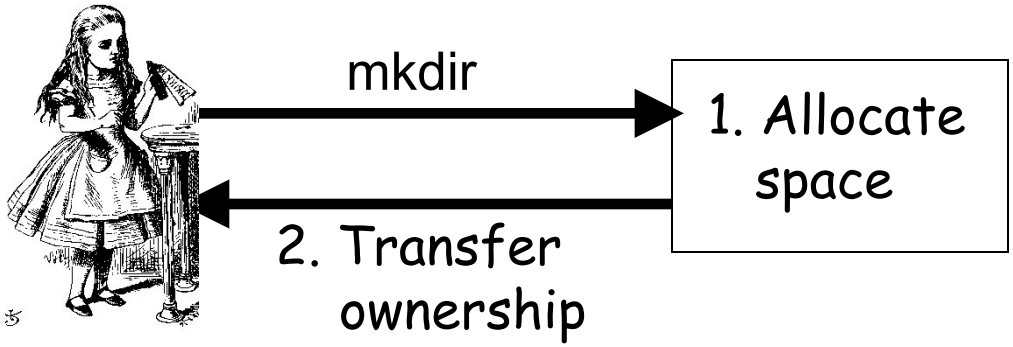

Mark Stamp's Information Security: Principles and Practices by Mark Stamp/ Deven Shah.
Copyright © 2009 Wiley India Pvt. Ltd. All rights reserved.

mkdir Attack

- The mkdir **race condition**

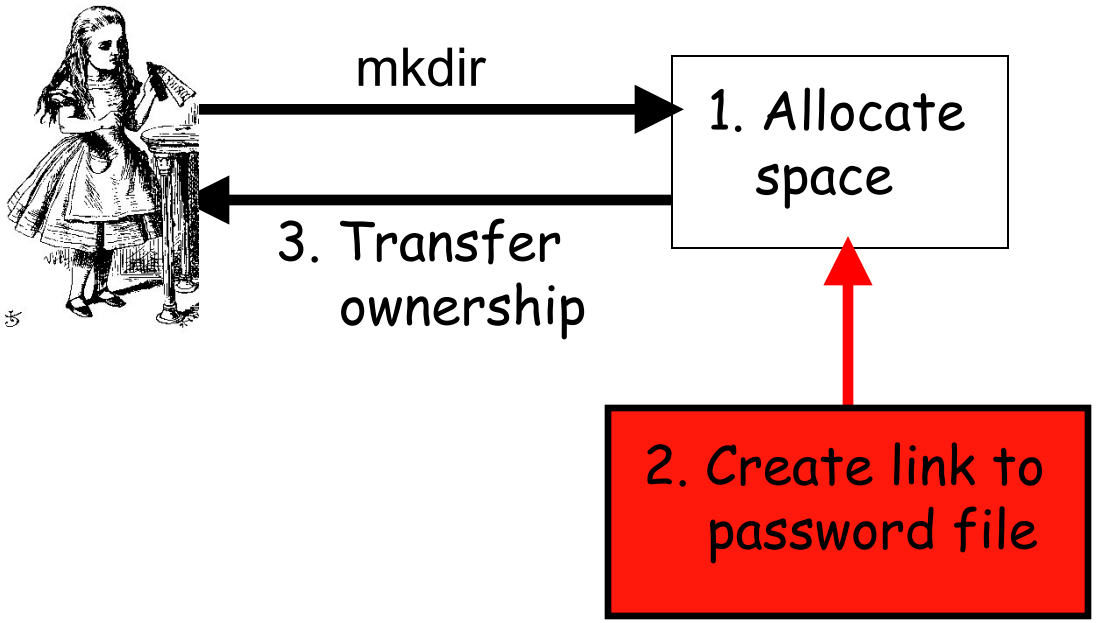

- Not really a "race"
  - But attacker's timing is critical

Mark Stamp's Information Security: Principles and Practices by Mark Stamp/ Deven Shah.
Copyright © 2009 Wiley India Pvt. Ltd. All rights reserved.

Race Conditions

- Race conditions are common
- Race conditions may be more prevalent than buffer overflows
- But race conditions harder to exploit
  - Buffer overflow is "low hanging fruit" today
- To prevent race conditions, make security-critical processes atomic
  - Occur all at once, not in stages
  - Not always easy to accomplish in practice

Mark Stamp's Information Security: Principles and Practices by Mark Stamp/ Deven Shah.
Copyright ☭ 2009 Wiley India Pvt. Ltd. All rights reserved.

Format String Vulnerabilities

Lecture Notes

- Available here

1 Format String

- What is a format string?

```
printf ("The magic number is: %d\n", 1911);
```

The text to be printed is "The magic number is:", followed by a format parameter '%d', which is replaced with the parameter (1911) in the output. Therefore the output looks like: The magic number is: 1911. In addition to %d, there are several other format parameters, each having different meaning. The following table summarizes these format parameters:

Parameter	Meaning	Passed as
%d	decimal (int)	value
%u	unsigned decimal (unsigned int)	value
%x	hexadecimal (unsigned int)	value
%s	string ((const) (unsigned) char *)	reference
%n	number of bytes written so far, (* int)	reference

- The stack and its role at format strings

  The behavior of the format function is controlled by the format string. The function retrieves the parameters requested by the format string from the stack.

```
printf ("a has value %d, b has value %d, c is at address: %08x\n",
                                a, b, &c);
```

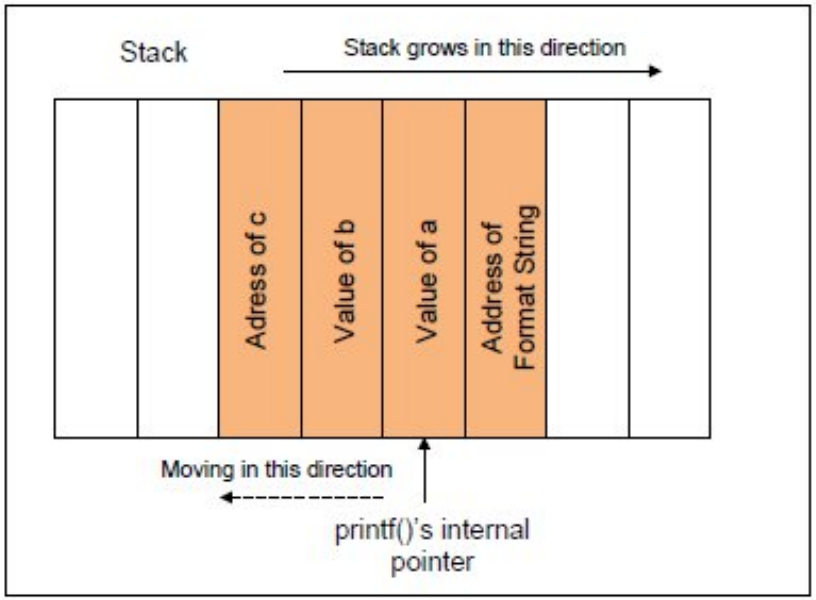

- What if there is a miss-match between the format string and the actual arguments?

```
printf ("a has value %d, b has value %d, c is at address: %08x\n",
                                a, b);
```

  - In the above example, the format string asks for 3 arguments, but the program actually provides only two (i.e. a and b).
  - Can this program pass the compiler?
    * The function `printf()` is defined as function with variable length of arguments. Therefore, by looking at the number of arguments, everything looks fine.
    * To find the miss-match, compilers needs to understand how `printf()` works and what the meaning of the format string is. However, compilers usually do not do this kind of analysis.
    * Sometimes, the format string is not a constant string, it is generated during the execution of the program. Therefore, there is no way for the compiler to find the miss-match in this case.
  - Can `printf()` detect the miss-match?
    * The function `printf()` fetches the arguments from the stack. If the format string needs 3 arguments, it will fetch 3 data items from the stack. Unless the stack is marked with a boundary, `printf()` does not know that it runs out of the arguments that are provided to it.
    * Since there is no such a marking. `printf()` will continue fetching data from the stack. In a miss-match case, it will fetch some data that do not belong to this function call.
  - What trouble can be caused by `printf()` when it starts to fetch data that is meant for it?

Attacks on Format String Vulnerability

- Crashing the program

```
printf ("%s%s%s%s%s%s%s%s%s%s%s");
```

- For each `%s`, `printf()` will fetch a number from the stack, treat this number as an address, and print out the memory contents pointed by this address as a string, until a NULL character (i.e., number 0, not character 0) is encountered.
- Since the number fetched by `printf()` might not be an address, the memory pointed by this number might not exist (i.e. no physical memory has been assigned to such an address), and the program will crash.
- It is also possible that the number happens to be a good address, but the address space is protected (e.g. it is reserved for kernel memory). In this case, the program will also crash.

- Viewing the stack

```
printf ("%08x %08x %08x %08x %08x\n");
```

  - This instructs the printf-function to retrieve five parameters from the stack and display them as 8-digit padded hexadecimal numbers. So a possible output may look like:

```
40012980 080628c4 bffff7a4 00000005 08059c04
```

- Viewing memory at any location
  - We have to supply an address of the memory. However, we cannot change the code; we can only supply the format string.
  - If we use `printf(%s)` without specifying a memory address, the target address will be obtained from the stack anyway by the `printf()` function. The function maintains an initial stack pointer, so it knows the location of the parameters in the stack.
  - Observation: the format string is usually located on the stack. If we can encode the target address in the format string, the target address will be in the stack. In the following example, the format string is stored in a buffer, which is located on the stack.

```
int main(int argc, char *argv[])
{
  char user_input[100];
  ... ... /* other variable definitions and statements */

  scanf("%s", user_input); /* getting a string from user */
  printf(user_input); /* Vulnerable place */

  return 0;
}
```

- Writing an integer to nearly any location in the process memory
  - `%n`: The number of characters written so far is stored into the integer indicated by the corresponding argument.

```
int i;
printf ("12345%n", &i);
```

  - It causes `printf()` to write 5 into variable i.
  - Using the same approach as that for viewing memory at any location, we can cause `printf()` to write an integer into any location. Just replace the `%s` in the above example with `%n`, and the contents at the address `0x10014808` will be overwritten.

- Using this attack, attackers can do the following:
  * Overwrite important program flags that control access privileges
  * Overwrite return addresses on the stack, function pointers, etc.
- However, the value written is determined by the number of characters printed before the `%n` is reached. Is it really possible to write arbitrary integer values?
  * Use dummy output characters. To write a value of 1000, a simple padding of 1000 dummy characters would do.
  * To avoid long format strings, we can use a width specification of the format indicators.

- Countermeasures.
  - Address randomization: just like the countermeasures used to protect against buffer-overflow attacks, address randomization makes it difficult for the attackers to find out what address they want to read/write.

- Address Space Layout Randomization (ASLR) – All memory addresses (heap / stack / libraries) are dynamic
- Writing secure code.
- Making use of compiler warnings
- Source code auditing

Malware

Mark Stamp's Information Security: Principles and Practices by Mark Stamp/ Deven Shah.
Copyright ☭ 2009 Wiley India Pvt. Ltd. All rights reserved.

Malicious software

- Programs which try to subvert expected operation of secured and benign codes
- Most common categories-
  - Worms
  - Viruses
  - Logic bombs
  - Trojans
  - Spyware
  - adware

Malicious Software

- Malware is not new…
- Fred Cohen's initial virus work in 1980's
  - Used viruses to break MLS systems
- Types of malware (lots of overlap)
  - **Virus** ❑ passive propagation
  - **Worm** ❑ active propagation
  - Trojan horse ❑ unexpected functionality
  - Trapdoor/backdoor ❑ unauthorized access
  - Rabbit ❑ exhaust system resources

Mark Stamp's Information Security: Principles and Practices by Mark Stamp/ Deven Shah.
Copyright ☭ 2009 Wiley India Pvt. Ltd. All rights reserved.

Worms

- Run independently
- Propagate a full working version of itself to other machines
- Analogous to parasites which live inside a host and use its resources for its existence
- Classified by primary method they use for transport
  - IM Worms
  - Email worms

Virus

- Cannot run independently
- Need host program to run and activate them
- A computer virus has-
  - Infection mechanism
  - Payload
  - Trigger

Virus pseudocode

```
infect();
if trigger( )
  then payload();
```

Where do Viruses Live?

- Just about anywhere…
- Boot sector
  - Take control before anything else
- Memory resident
  - Stays in memory
- Applications, macros, data, etc.
- Library routines
- Compilers, debuggers, virus checker, etc.
  - These are particularly nasty!

Mark Stamp's Information Security: Principles and Practices by Mark Stamp/ Deven Shah.
Copyright ☭ 2009 Wiley India Pvt. Ltd. All rights reserved.

Virus classification by target

- Boot sector virus
  - Primary boot
  - Secondary boot
- Executable file infectors
  - Prepending Virus -placed at beginning,
  - Appending virus- placed at end,
  - Virus code is over-written or inserted into a file
- Data file infectors- macro virus

Virus classification by target

- Overwriting virus
  - Do not change target file size
- Companion virus
  - Do not modify infected code
  - Installs itself in such a way that it gets executed before the target code

Virus classification based on concealment

- Encryption – encrypts itself to prevent detection
- Oligomorphism – uses a varying key, the virus body gets changed with every infection
- Polymorphism – many decryptor loops
- Metamorphism – changes the entire body using mutation engine

Virus classification - Encryption

- Makes detection difficult
- Has a decryptor loop for decryption and transfer of control to it
- Encryption techniques used
  - Simple transformation
  - Key mixing
  - Substitution cipher
  - Strong encryption
- Signature detection is easy

Virus classification - Oligomorphism

- uses a pool of decryptors Instead of one; so uses varying keys
- Entire virus changes and becomes harder to detect
- Difficulty is very marginal as anti-virus needs to check only loop variants

Virus classification - Polymorphism

- Almost same as Oligomorphism but has extremely large number of decryptor loops
- Mutation engine changes loop with every encryption

Methods used for writing viruses

- Instruction equivalence
- Instruction sequence equivalence
- Instruction reordering
- Register renaming
- Concurrency
- Writing convoluted programs
- Inlining & outlining function calls

Virus classification - Metamorphism

- Do not have decryption loops
- Mutation engine changes for every infection

Logic bombs

- Has typically two parts
  - Payload-malicious piece of code
  - Trigger- Boolean logic
- Time bombs are examples of logic bombs

Trojans

- Malicious programs that perform some harmless activities in addition to malicious activities

Trojan Horse Example

- A trojan has unexpected function
- Prototype of trojan for the Mac
- File icon for freeMusic.mp3:

- For a real mp3, double click on icon
  - iTunes opens
  - Music in mp3 file plays
- But for freeMusic.mp3, unexpected results…

Mark Stamp's Information Security: Principles and Practices by Mark Stamp/ Deven Shah.
Copyright © 2009 Wiley India Pvt. Ltd. All rights reserved.

Trojan Example

- Double click on freeMusic.mp3
  - iTunes opens (expected)
  - "Wild Laugh" (probably not expected)
  - Message box (unexpected)

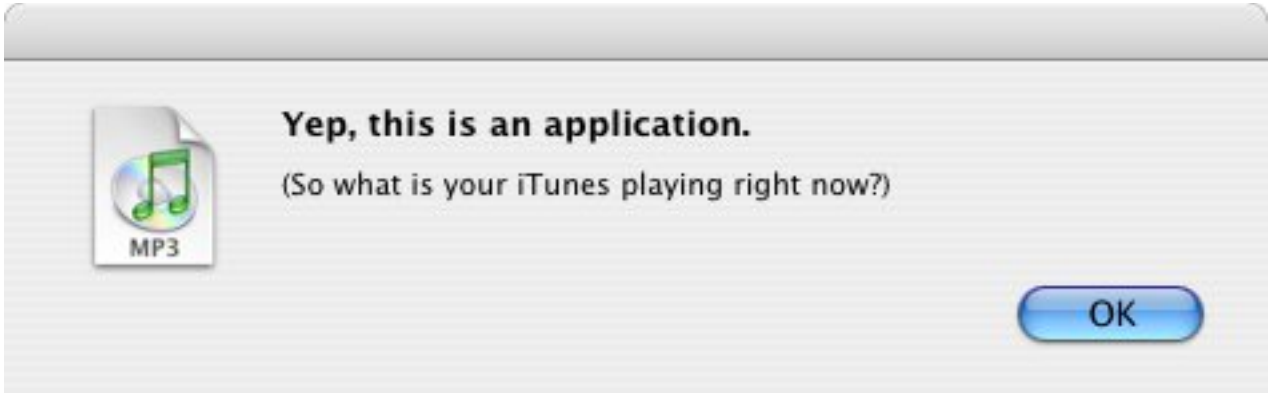

Mark Stamp's Information Security: Principles and Practices by Mark Stamp/ Deven Shah.
Copyright © 2009 Wiley India Pvt. Ltd. All rights reserved.

Trojan Example

- How does freeMusic.mp3 trojan work?
- This "mp3" is an application, not data!

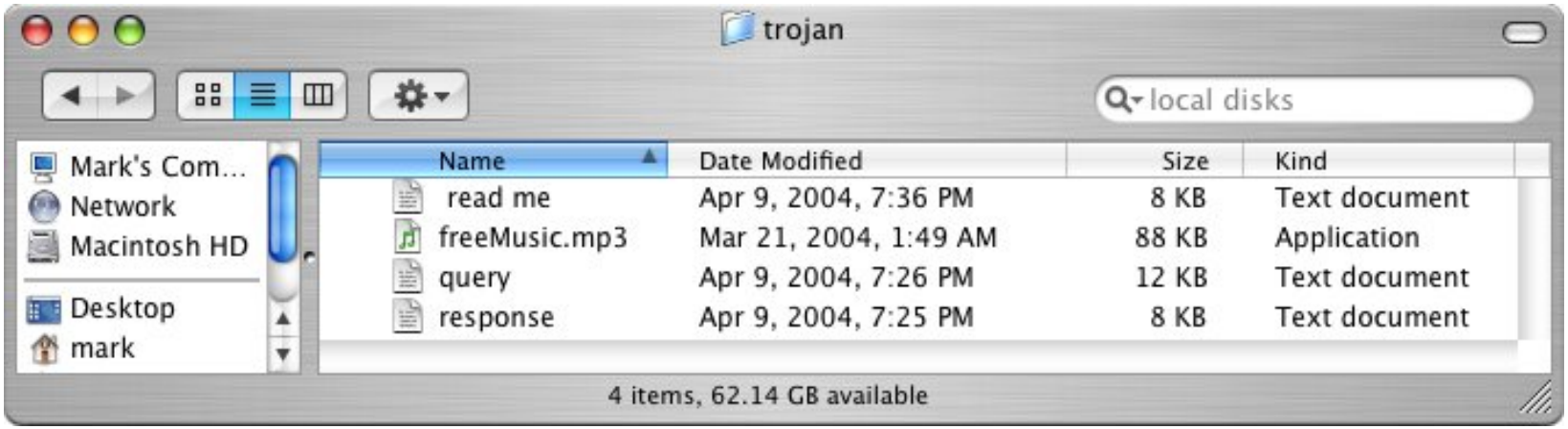

- This trojan is harmless, but…
- Could have done anything user can do
  - Delete files, download files, launch apps, etc.

Mark Stamp's Information Security: Principles and Practices by Mark Stamp/ Deven Shah.
Copyright © 2009 Wiley India Pvt. Ltd. All rights reserved.

Spyware

- A software used to collect & transmit information from victim computer
- Spywares do not replicate themselves
- Different form of trojans
- Often get downloaded when viewing some webpage, called drive by download concept
- Examples of info gathered by spywares
  - Passwords
  - Credit card numbers and bank secrets
  - Software license keys

Adwares

- Have similarities with spywares
- Not self-replicating
- Objective is marketing

Malware Detection

- Three common methods
  - Signature detection
  - Change detection
  - Anomaly detection
- We'll briefly discuss each of these
  - And consider advantages and disadvantages of each

Mark Stamp's Information Security: Principles and Practices by Mark Stamp/ Deven Shah.
Copyright ©2009 Wiley India Pvt. Ltd. All rights reserved.

Signature Detection

- A **signature** is a string of bits found in software (or could be a hash value)
- Suppose that a virus has signature 0x23956a58bd910345
- We can search for this signature in all files
- If we find the signature are we sure we've found the virus?
  - No, same signature could appear in other files
  - But at random, chance is very small: $1/2^{64}$
  - Software is not random, so probability is higher

Mark Stamp's Information Security: Principles and Practices by Mark Stamp/ Deven Shah.
Copyright © 2009 Wiley India Pvt. Ltd. All rights reserved.

Signature Detection

- Advantages
  - Effective on "traditional" malware
  - Minimal burden for users/administrators
- Disadvantages
  - Signature file can be large (10,000's)…
  - …making scanning slow
  - Signature files must be kept up to date
  - Cannot detect unknown viruses
  - Cannot detect some new types of malware
- By far the most popular detection method

Mark Stamp's Information Security: Principles and Practices by Mark Stamp/ Deven Shah.
Copyright ☭ 2009 Wiley India Pvt. Ltd. All rights reserved.

Change Detection

- Viruses must live somewhere on system
- If we detect that a file has changed, it may be infected
- How to detect changes?
  - Hash files and (securely) store hash values
  - Recompute hashes and compare
  - If hash value changes, file **might** be infected
  - Check for oligomorphism and polymorphism

Change Detection

- Advantages
  - Virtually no false negatives
  - Can even detect previously unknown malware
- Disadvantages
  - Many files change ❑ and often
  - Many false alarms (false positives)
  - Heavy burden on users/administrators
  - If suspicious change detected, then what?
  - Might still need signature-based system

Mark Stamp's Information Security: Principles and Practices by Mark Stamp/ Deven Shah.
Copyright ☭ 2009 Wiley India Pvt. Ltd. All rights reserved.

Anomaly Detection

- Monitor system for anything "unusual" or "virus-like" or potentially malicious
- What is unusual?
  - Files change in some unusual way
  - System misbehaves in some way
  - Unusual network activity
  - Unusual file access, etc., etc., etc.
- But must first define "normal"
  - And normal can change!

Mark Stamp's Information Security: Principles and Practices by Mark Stamp/ Deven Shah.
Copyright ☭ 2009 Wiley India Pvt. Ltd. All rights reserved.

Anomaly Detection

- Advantages
  - Chance of detecting unknown malware
- Disadvantages
  - Unproven in practice
  - Trudy can make abnormal look normal (go slow)
  - Must be combined with another method (such as signature detection)
- Also popular in intrusion detection (IDS)
- A difficult unsolved (unsolvable?) problem
  - As difficult as AI?

Mark Stamp's Information Security: Principles and Practices by Mark Stamp/ Deven Shah.
Copyright ☭ 2009 Wiley India Pvt. Ltd. All rights reserved.

Intrusion Detection System

- IDS- Process of monitoring events occurring in a system or network.
- IPS- process of detecting signs of intrusion and attempting to stop the intrusive efforts
- IDPS- collective system IDS & IPS

Types of intruders

- Masquerader – typically outsiders, penetrate system by way of legitimate user accounts
- Misfeasor – typically insiders but misuse their privileges
- Clandestine – can be both insiders and outsiders, gain supervisory access to the system

Types of IDPS technologies

- Network based
  - n/w segment and network & application protocols
- Wireless
  - Wireless n/w traffic, wireless protocols
- Network behavior analysis
  - Unusual traffic flows, DDoS attacks, malwares and policy violations
- Host based

Uses of IDS

- Identifying security policy problems
- Documenting existing threats to organizations
- Deferring individuals from violating security policies
- Preventive actions of IDPS
- IDPS change security environment
- IDPS can change attack contents

Common components of IDS

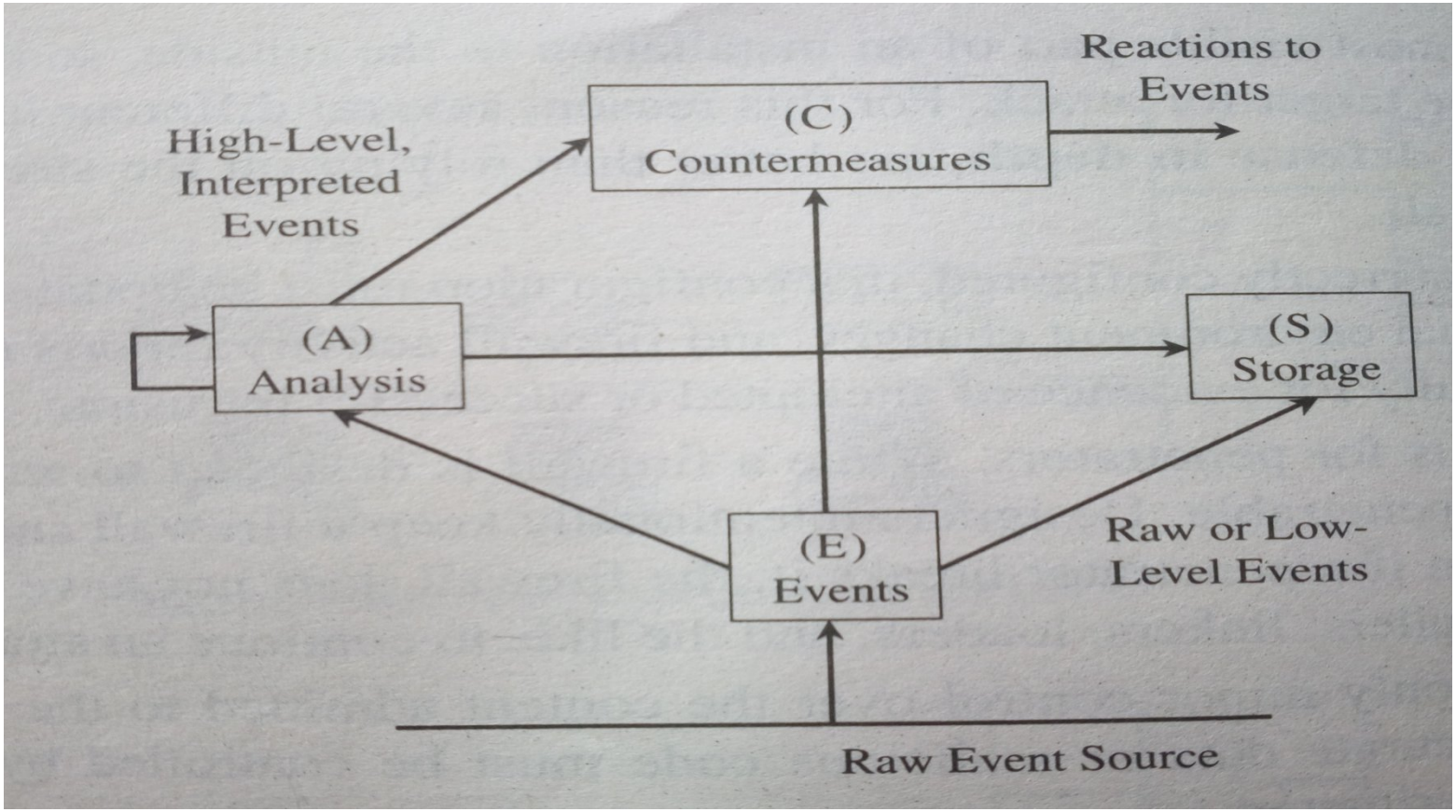

Intrusion detection techniques

- Signature based detection
- Anomaly/heuristic based detection
- Stateful protocol analysis

Signature based IDS

- Use string matching as the underlying principle
- Current packet or log entry is matched to a list of signatures

Signature based- Disadvantages

- Ineffective against known threats
- Cannot pair request with corresponding response(e.g. error codes)
- Cannot detect attacks that comprise multiple events and none of the events contains attack indication
- Cannot remember previous requests

Anomaly based IDS

- Compares definitions of normal activities against observed activities
- Maintains normal profile behaviors of users, hosts, network connections or applications
- Profiles can be static or dynamic generated during training period
- Static profiles get outdated very soon
- Dynamic profiles get attacked by evasive techniques to fool IDPS

Anomaly based disadvantages

- Very effective in detecting known attack
- Suffer from false positives; treat benign activities as malicious

Stateful protocol analysis

- Compares predetermined profiles of generally accepted definitions of benign protocol activity for each protocol against observed ones
- Relies on vendor-developed universal profiles that specifies how protocol should work
- IDPS is capable of checking networks, applications, and application protocols that have notion of state

Stateful protocol analysis

- Can identify unexpected sequences of commands
- Drawback-
  - Extremely resource sensitive
  - Do not capture attacks those do not violate the characteristic of generally accepted protocol behavior
    - E.g. there may be several benign requests which create a DoS

Firewalls

- A single point of defense between two networks
- Can be simply a router/a group of routers that is used to filter the packets along with application level proxy services
- Mechanisms-
  - Allow
  - block

Network Topology Hierarchy

- DMZ- separates the external network perimeter and internal network
- Firewalls- placed between internet & DMZ and DMZ & internal network
- A DMZ is simply a method of networking arrangement, by segregating servers that are often accessed from the outside.

Types of Firewall

- Packet filtering firewall
- Circuit level firewall
- Application layer firewall

Packet filtering firewall

- Analyzes network traffic at transport layer
- Contains rules for allowable data flow and direction of data flow
- Rules are kept in TCP/IP kernel and applied to any packet
- Actions
  - Deny
  - Permit

Factors those allow/deny data flow through packet filters

- Physical network interface (n/w adaptor) that packet arrives on
- Source address of data
- Destination address of data
- Type of transport layer protocol- TCP/UDP
- Transport layer source port
- Transport layer destination port

Advantages

- Faster than other technologies
- Less complicated, a single rule can control deny or allow of packets
- Do not require client computers to be configured specially
- They shield internal IP address from external world by doing network address translation

Disadvantages

- Do not understand application layer protocols and hence cannot restrict access to FTP services, such as PUT & GET commands
- They are stateless, and so not suitable for application layer protocols
- Have no audit event generation and alerting mechanism

Circuit level firewall

- Similar in operation as packet filtering firewalls, but..
  - Operate at session and transport layer
  - Validates TCP & UDP sessions before opening a circuit/connection, through firewall.
- Maintains a table of valid connections and lets data pass through when session info matches table entry
- Once session terminates, circuit is closed and table entry is removed.
- Examines each connection

Circuit level firewall stores-

- Unique session identifier
- State of the connection, namely handshake, established, or closing
- Sequencing information
- Source IP address
- Destination IP address
- Physical network interface through which data arrives
- Physical network interface through which data goes out

Advantages

- Faster than application layer firewalls
- More secured than packet filtering firewalls
- maintain limited state information of protocols
- Protect against packet spoofing
- They shield internal IP addresses from external networks by n/w address translation

Disadvantages

- Cannot restrict access to protocol subsets other than TCP
- Have limited audit event generation capabilities
- Cannot perform security checks on higher level protocols

Application layer firewalls

- Evaluates network layer packets for valid data at application layer before allowing a connection
- Examines data in all network packets at application layer and maintains complete list of connection states and sequencing information
- Validates other security items which appear at application layer, such as passwords and service requests

Application layer firewalls

- Act as proxy service to manage data through firewall for specific service
- Dedicated to particular protocols and provide additional security checks, access controls and generate audit records
- Proxy services
  - Proxy server
  - Proxy client

Advantages

- Enforce and understand high level protocols, like HTTP & FTP
- Maintain info about communication passing through firewall server:
  - partial communication derived state info,
  - full application derived state info,
  - partial session information
  - Can be used to deny access to certain network services and allow others

Advantages..

- Capable of processing and manipulating packet data
- Do not allow direct communication between external servers and internal systems, thus shields internal IP addresses from outside network
- Transparent between user and external network
- Provide features like HTTP object caching, URL filtering and user authentication
- Good at generating auditing records, allowing admins to monitor threats to the firewall

Disadvantages

- Requires replacing the native network stack on firewall server
- Do not allow network servers to run on firewall servers, as proxy servers use same port to listen
- Slow and thus lead to performance degradation
- Not scalable, as each network service adds onto the number of proxy services required
- Requires modification to client procedures
- Rely on OS support and thus are vulnerable to bugs in the system such as NIDS, TCP/IP, WinSock, Win32 bugs

Dynamic packet filtering firewall

TABLE 7-8 Comparison of Firewall Types.

Packet Filtering	Stateful Inspection	Application Proxy	Guard	Personal Firewall
Simplest	More complex	Even more complex	Most complex	Similar to packet filtering firewall
Sees only addresses and service protocol type	Can see either addresses or data	Sees full data portion of packet	Sees full text of communication	Can see full data portion of packet
Auditing difficult	Auditing possible	Can audit activity	Can audit activity	Can—and usually does—audit activity
Screens based on connection rules	Screens based on information across packets—in either header or data field	Screens based on behavior of proxies	Screens based on interpretation of message content	Typically, screens based on information in a single packet, using header or data
Complex addressing rules can make configuration tricky	Usually preconfigured to detect certain attack signatures	Simple proxies can substitute for complex addressing rules	Complex guard functionality can limit assurance	Usually starts in "deny all inbound" mode, to which user adds trusted addresses as they appear

Software Summary

- Software flaws
  - Buffer overflow
  - Race conditions
  - Incomplete mediation
- Malware
  - Viruses, worms, etc.
- Other software-based attacks

Mark Stamp's Information Security: Principles and Practices by Mark Stamp/ Deven Shah.
Copyright ☭ 2009 Wiley India Pvt. Ltd. All rights reserved.

Not in syllabus- Given for information Miscellaneous Attacks

Mark Stamp's Information Security: Principles and Practices by Mark Stamp/ Deven Shah.
Copyright ☭ 2009 Wiley India Pvt. Ltd. All rights reserved.

Miscellaneous Attacks

- Numerous attacks involve software
- We'll discuss a few issues that do not fit in previous categories
  - Salami attack
  - Linearization attack
  - Time bomb
  - Can you ever trust software?

Mark Stamp's Information Security: Principles and Practices by Mark Stamp/ Deven Shah.
Copyright © 2009 Wiley India Pvt. Ltd. All rights reserved.

Salami Attack

- What is Salami attack?
  - Programmer "slices off" money
  - Slices are hard for victim to detect
- Example
  - Bank calculates interest on accounts
  - Programmer "slices off" any fraction of a cent and puts it in his own account
  - No customer notices missing partial cent
  - Bank may not notice any problem
  - Over time, programmer makes lots of money!

Mark Stamp's Information Security: Principles and Practices by Mark Stamp/ Deven Shah.
Copyright ☭ 2009 Wiley India Pvt. Ltd. All rights reserved.

Salami Attack

- Such attacks are possible for insiders
- Do salami attacks actually occur?
- Programmer added a few cents to every employee payroll tax withholding
  - But money credited to programmer's tax
  - Programmer got a big tax refund!
- Rent-a-car franchise in Florida inflated gas tank capacity to overcharge customers

Mark Stamp's Information Security: Principles and Practices by Mark Stamp/ Deven Shah.
Copyright © 2009 Wiley India Pvt. Ltd. All rights reserved.

Salami Attacks

- Employee reprogrammed Taco Bell cash register: $2.99 item registered as $0.01
  - Employee pocketed $2.98 on each such item
  - A large "slice" of salami!
- In LA four men installed computer chip that overstated amount of gas pumped
  - Customer complained when they had to pay for more gas than tank could hold!
  - Hard to detect since chip programmed to give correct amount when 5 or 10 gallons purchased
  - Inspector usually asked for 5 or 10 gallons!

Mark Stamp's Information Security: Principles and Practices by Mark Stamp/ Deven Shah.
Copyright ☭ 2009 Wiley India Pvt. Ltd. All rights reserved.

Linearization Attack

- Program checks for serial number S123N456
- For efficiency, check made one character at a time
- Can attacker take advantage of this?

```
#include <stdio.h>

int main(int argc, const char *argv[])
{
    int i;
    char serial[9]="S123N456\n";

    for(i = 0; i < 8; ++i)
    {
        if(argv[1][i] != serial[i]) break;
    }
    if(i == 8)
    {
        printf("\nSerial number is correct!\n\n");
    }
}
```


Mark Stamp's Information Security: Principles and Practices by Mark Stamp/ Deven Shah.
Copyright ☭ 2009 Wiley India Pvt. Ltd. All rights reserved.

Linearization Attack

- Correct string takes longer than incorrect
- Attacker tries all 1 character strings
  - Finds S takes most time
- Attacker then tries all 2 char strings S
  - Finds S1 takes most time
- And so on…
- Attacker is able to recover serial number one character at a time!

Mark Stamp's Information Security: Principles and Practices by Mark Stamp/ Deven Shah.
Copyright © 2009 Wiley India Pvt. Ltd. All rights reserved.

Linearization Attack

- What is the advantage of attacking serial number one character at a time?
- Suppose serial number is 8 characters and each has 128 possible values
  - Then $128^8 = 2^{56}$ possible serial numbers
  - Attacker would guess the serial number in about 2^{55} tries ❑ a lot of work!
  - Using the linearization attack, the work is about $8(128/2) = 2^9$ which is trivial!

Mark Stamp's Information Security: Principles and Practices by Mark Stamp/ Deven Shah.
Copyright ☭ 2009 Wiley India Pvt. Ltd. All rights reserved.

Linearization Attack

- A real-world linearization attack
- TENEX (an ancient timeshare system)
  - Passwords checked one character at a time
  - Careful timing was not necessary, instead…
  - …could arrange for a "page fault" when next unknown character guessed correctly
  - The page fault register was user accessible
  - Attack was very easy in practice

Mark Stamp's Information Security: Principles and Practices by Mark Stamp/ Deven Shah.
Copyright ☭ 2009 Wiley India Pvt. Ltd. All rights reserved.

Time Bomb

- In 1986 Donald Gene Burleson told employer to stop withholding taxes from his paycheck
- His company refused
- He planned to sue his company
  - He used company computer to prepare legal docs
  - Company found out and fired him
- Burleson had been working on a malware…
- After being fired, his software "time bomb" deleted important company data

Mark Stamp's Information Security: Principles and Practices by Mark Stamp/ Deven Shah.
Copyright ☭ 2009 Wiley India Pvt. Ltd. All rights reserved.

Time Bomb

- Company was reluctant to pursue the case
- So Burleson sued company for back pay!
  - Then company finally sued Burleson
- In 1988 Burleson fined $11,800
  - Took years to prosecute
  - Cost thousands of dollars to prosecute
  - Resulted in a slap on the wrist
- One of the first computer crime cases
- Many cases since follow a similar pattern
  - Companies often reluctant to prosecute

Mark Stamp's Information Security: Principles and Practices by Mark Stamp/ Deven Shah.
Copyright ☭ 2009 Wiley India Pvt. Ltd. All rights reserved.

Thank You